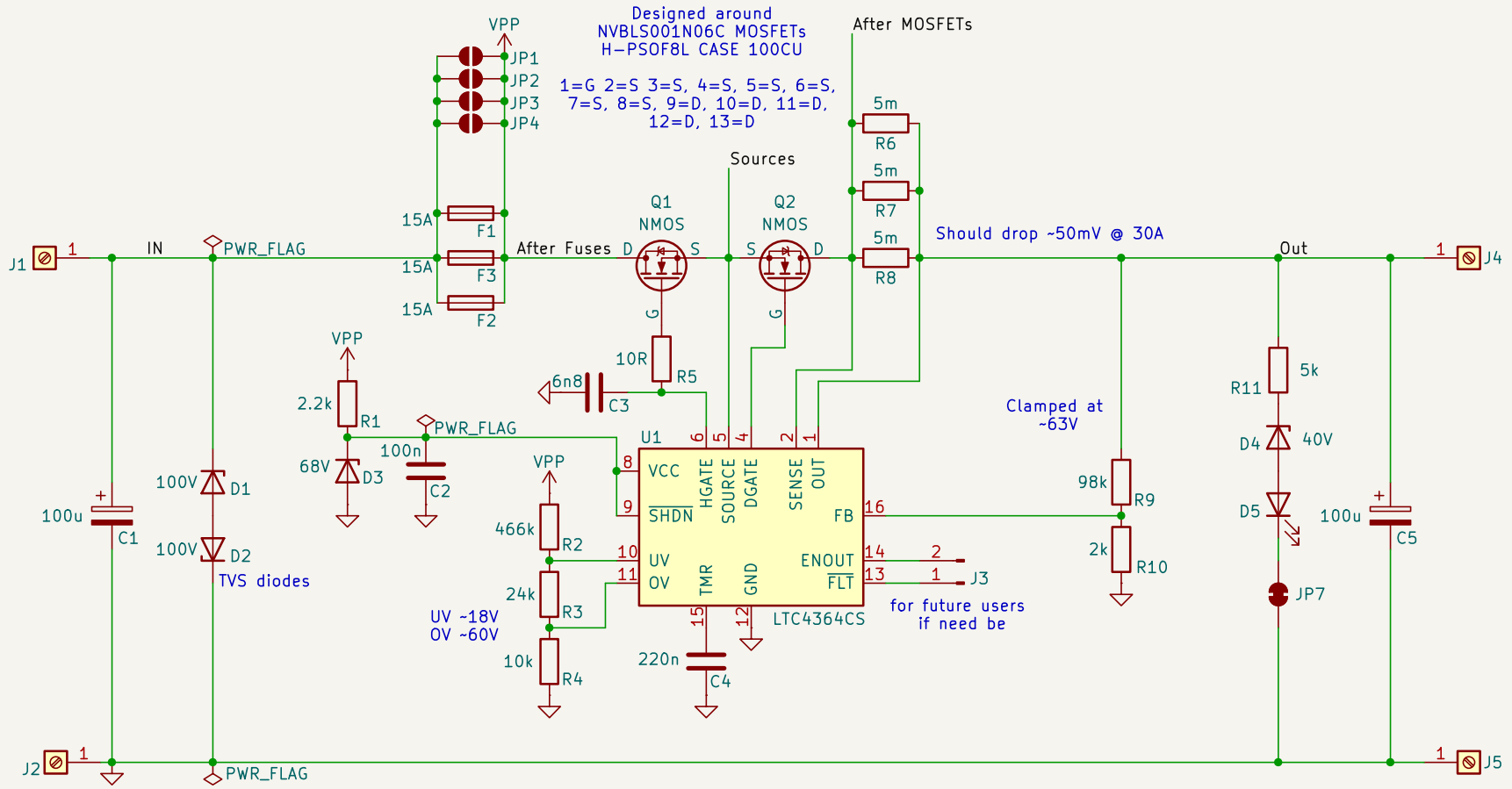

Designed by Dmitriy Pautov

UIUC EV Concept Car RSO

Sheet: /
File: ocboard.kicad_sch

Title: Battery Overcurrent Protection Board

Size: A5	Date: 2024-11-10	**Rev: A**
KiCad E.D.A. 8.0.3		Id: 1/1